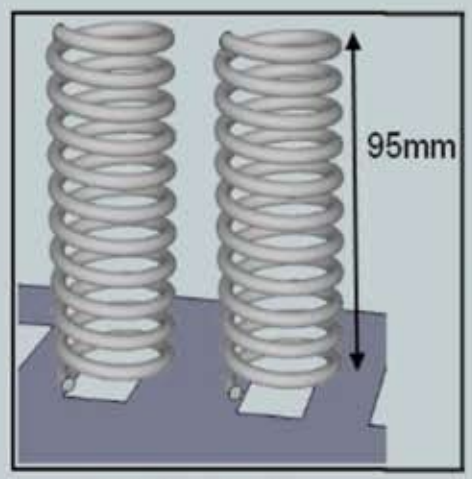


Detaliu interior

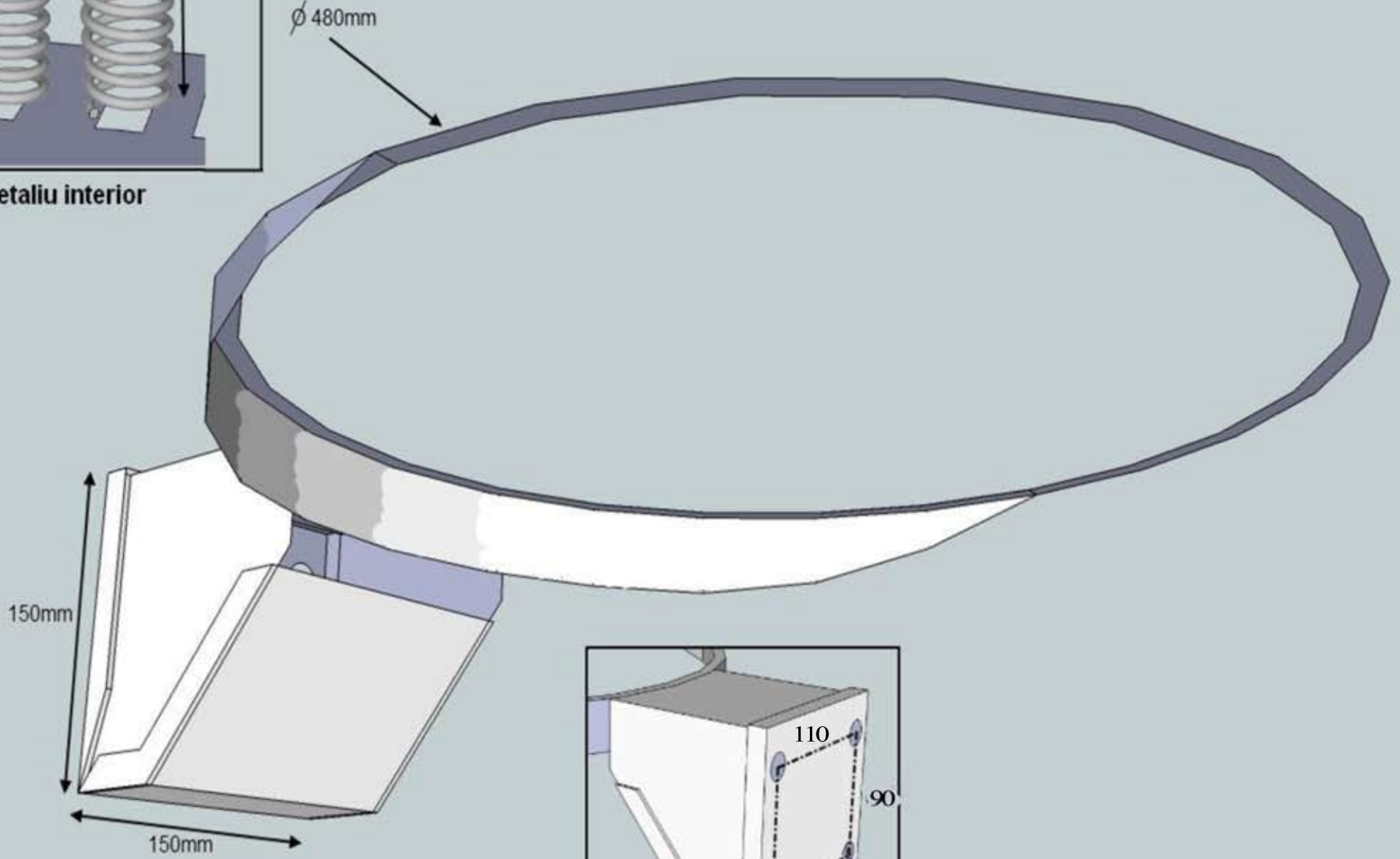


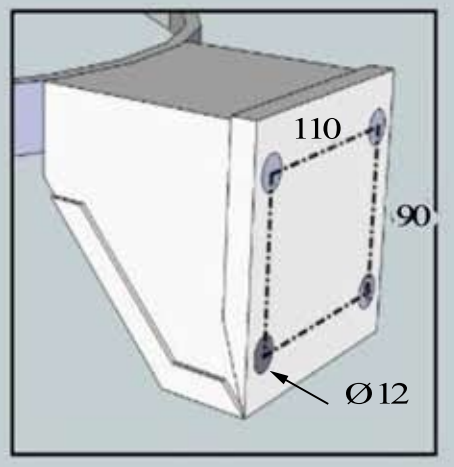


artimex sport equipment