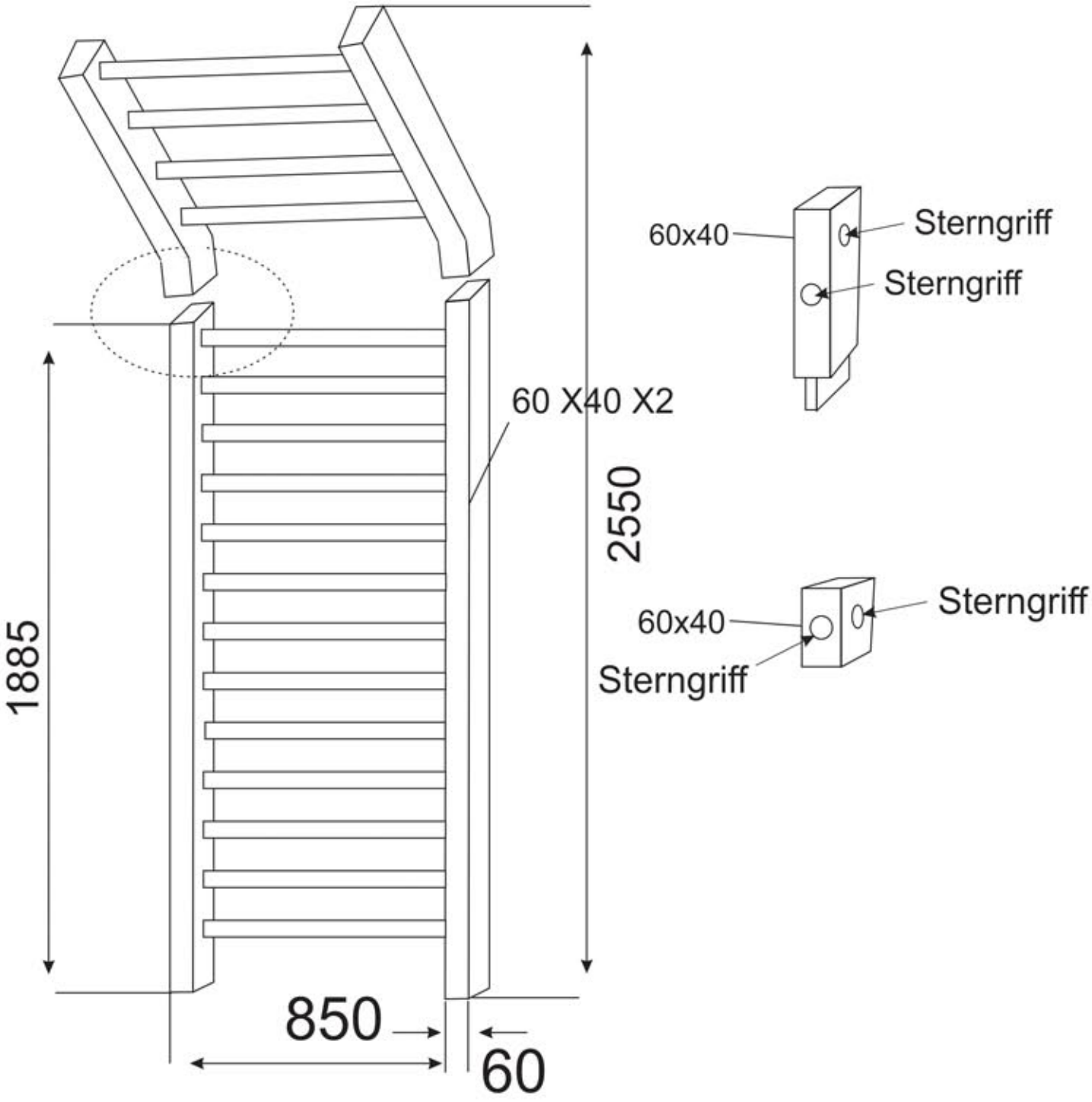

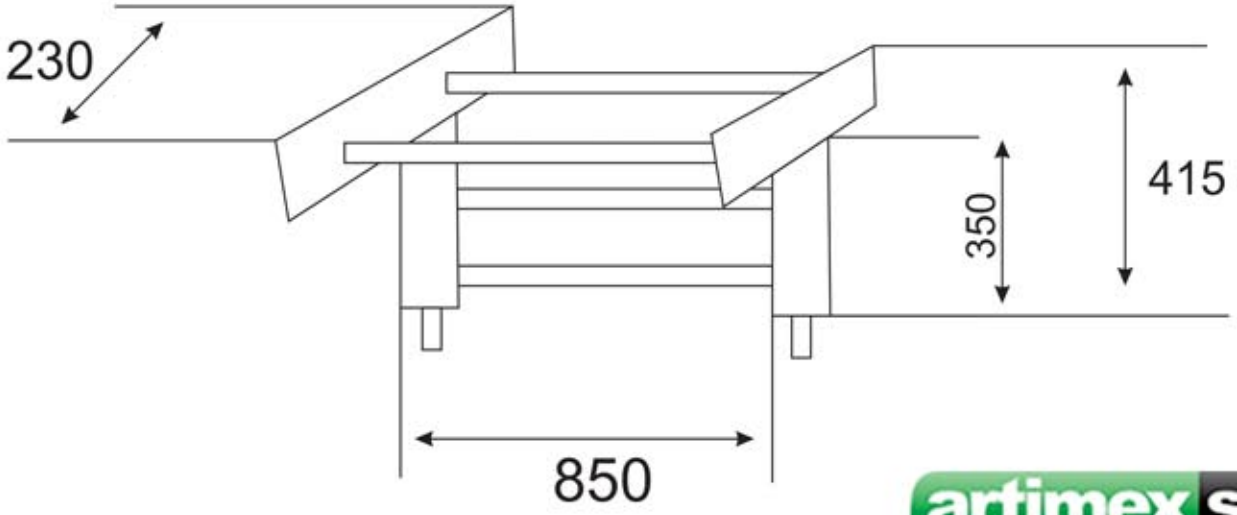

artimex sport equipment